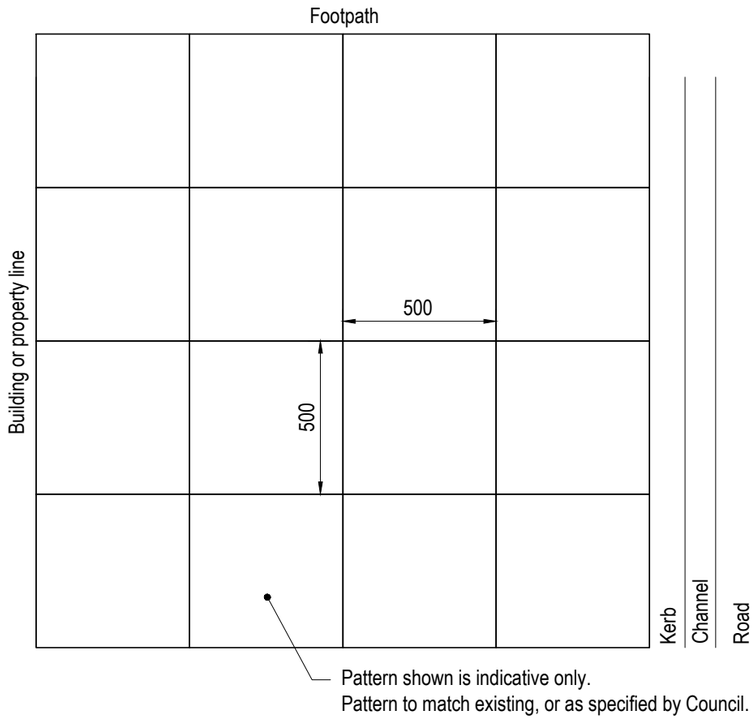

CONCRETE PAVING CAST INSITU LAYOUT

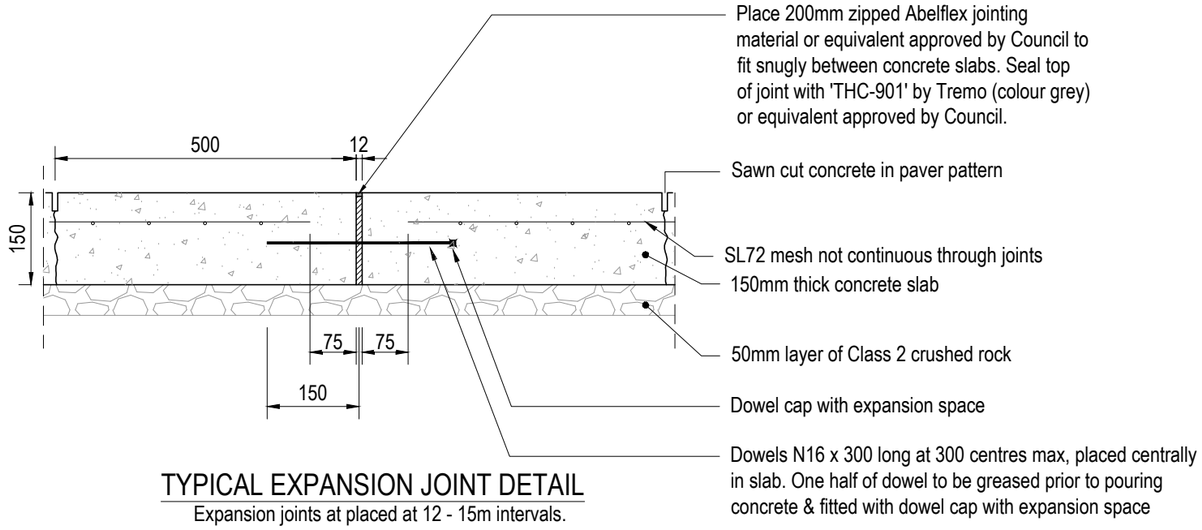

TYPICAL EXPANSION JOINT DETAIL

Expansion joints at placed at 12 - 15m intervals.

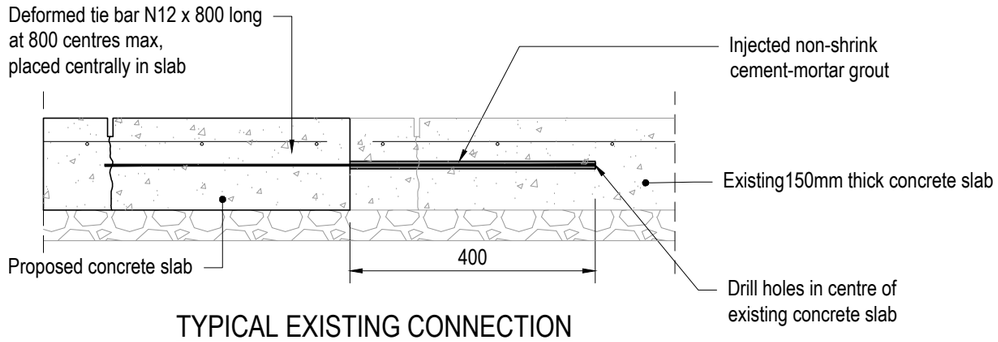

TYPICAL EXISTING CONNECTION JOINT DETAIL

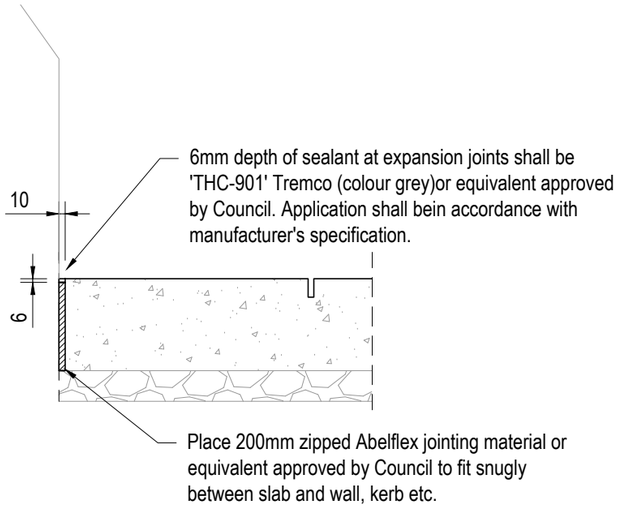

TYPICAL ISOLATION JOINT DETAIL

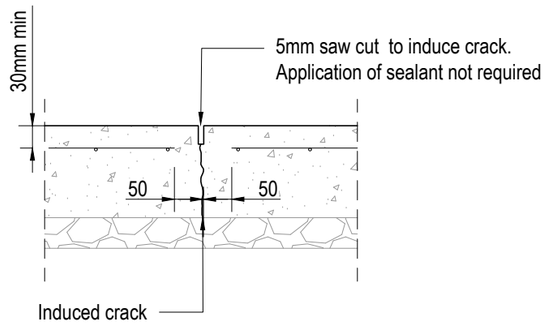

TYPICAL CRACK-INDUCED CONTRACTION JOINT

Intervals to match desired paving layout

NOTES

1. Standard size of cast insitu paving unit is 500x 500.
2. Concrete strength: 32 MPa at 28 days.
3. Concrete to be formed and cut in a pattern to match existing pavement, or as specified by Council.
4. The paving should provide a consistent finish and be level and flush with existing pavement surfaces.
5. Reinforcement with 300mm min lap, placed centrally using bar chairs.
6. All dimensions are in millimetres unless noted otherwise.

No	Revision	Date
B	APPROVED FOR USE	DEC 2020

Disclaimer:

The authors and sponsoring organisations shall have no liability or responsibility to the user or any other person or entity with respect to any liability, loss or damage caused or alleged to be caused, directly or indirectly, by the adoption and use of these Standard Drawings including, but not limited to, any interruption of service, loss of business or anticipatory profits, or consequential damages resulting from the use of these Standard Drawings. Persons must not rely on these Standard Drawings as the equivalent of, or a substitute for, project-specific design and assessment by an appropriately qualified professional.

G:\3%3%2%CAD0\Drawings\CoPP_Logo.png

DRAWING NOT TO SCALE

Approved: Project Services

Date: Dec. 2020

Drawing Title: FOOTPATH PAVEMENT CONCRETE PAVER INSITU

Original Size: A3

Drawing No: CPP1305

Rev: B

Plot Date: 20 December 2024 - 8:08 AM